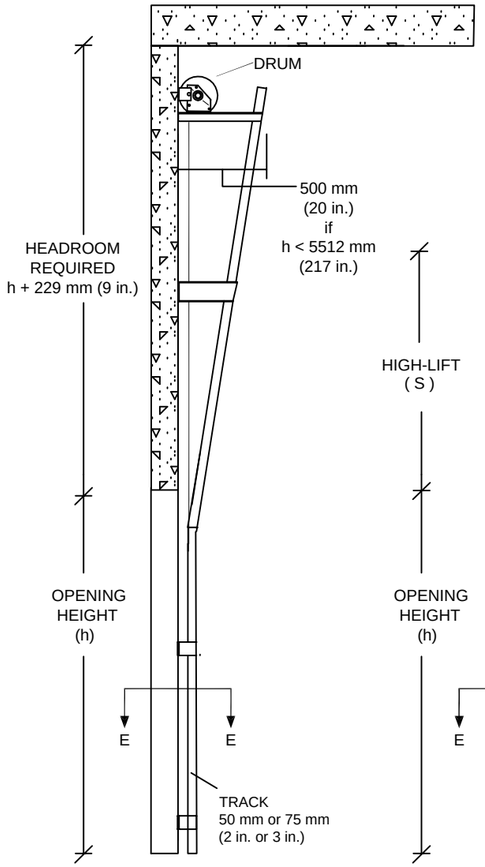

VERTICAL LIFT
VL

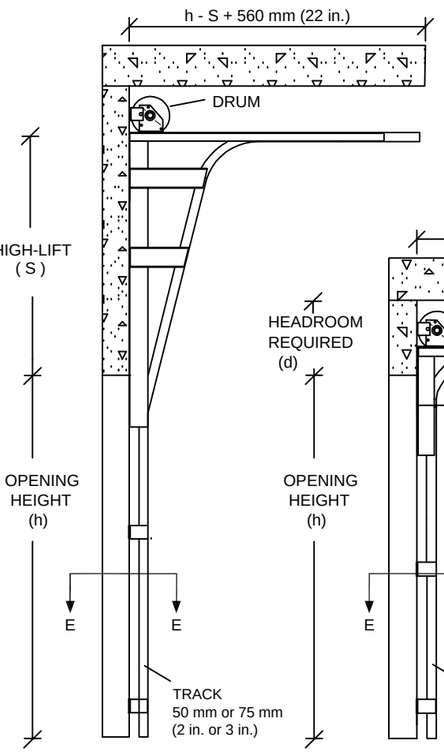

HIGH-LIFT
HL

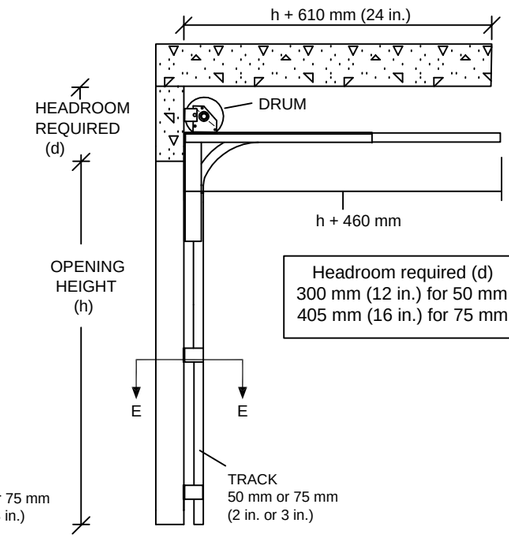

STANDARD LIFT
STD

Headroom required (d)
300 mm (12 in.) for 50 mm (2 in.) track
405 mm (16 in.) for 75 mm (3 in.) track

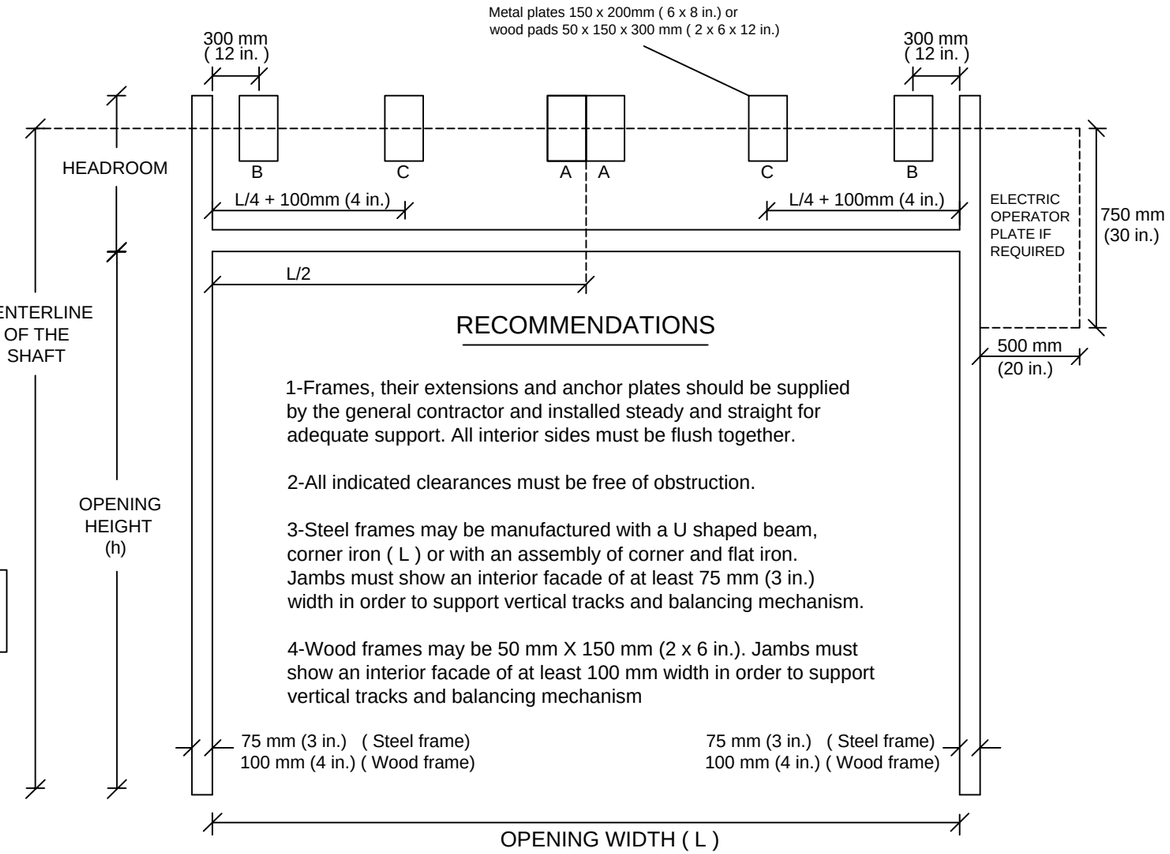

RECOMMENDATIONS

1-Frames, their extensions and anchor plates should be supplied by the general contractor and installed steady and straight for adequate support. All interior sides must be flush together.

2-All indicated clearances must be free of obstruction.

3-Steel frames may be manufactured with a U shaped beam, corner iron (L) or with an assembly of corner and flat iron. Jambs must show an interior facade of at least 75 mm (3 in.) width in order to support vertical tracks and balancing mechanism.

4-Wood frames may be 50 mm X 150 mm (2 x 6 in.). Jambs must show an interior facade of at least 100 mm width in order to support vertical tracks and balancing mechanism

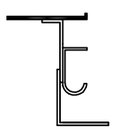

TRACK GUARD
"L" TYPE
1524 mm (60 in.) high
(OPTION)

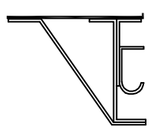

FENDER GUARD
" Z " TYPE
1524 mm (60 in.) high
(OPTION)

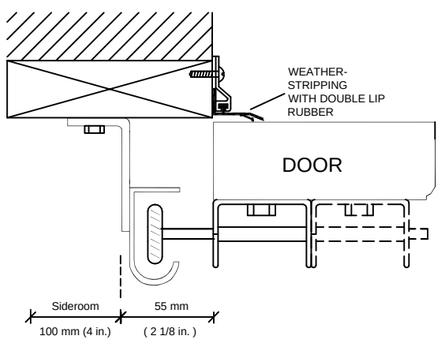

E-E
(Wood frame)

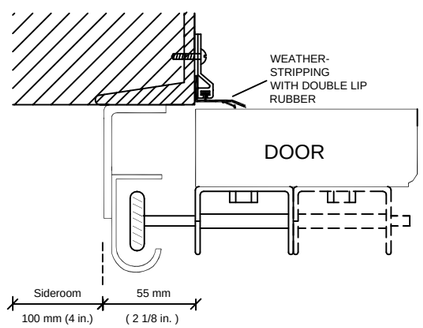

E-E
(Steel frame)

GARAGA INC.

PAGE : 2 OF 2

HARWARE FOR
OVERHEAD DOOR

PROJECT:

DISTRIB. :

ARCHITECT:

CONTRACTOR:

DATE :

# DOOR	QTY	WIDTH	HEIGHT	TRACK	LIFT	TOTAL HEIGHT REQUIRED	JAMB	SPRING PADS		OPTIONS				OPTIONS
								POSITION	SHAFT CENTERLINE	CONTIN. ANGLE	DOUBLE HINGES	FENDER GUARDS	CYCLE SPRINGS	